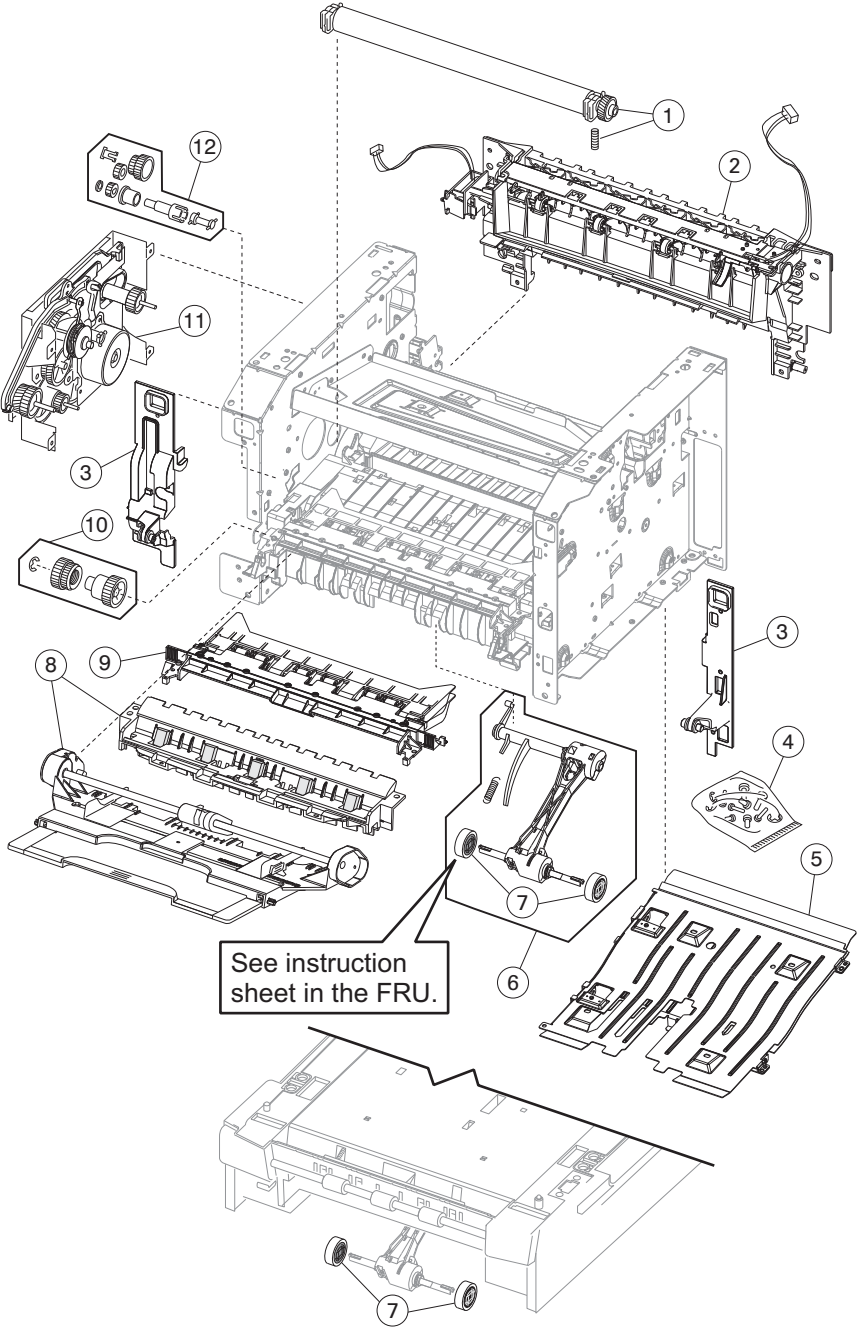
1
2
12
11
3
10
3
8
9
4
5
7
6
See instruction sheet in the FRU.
7