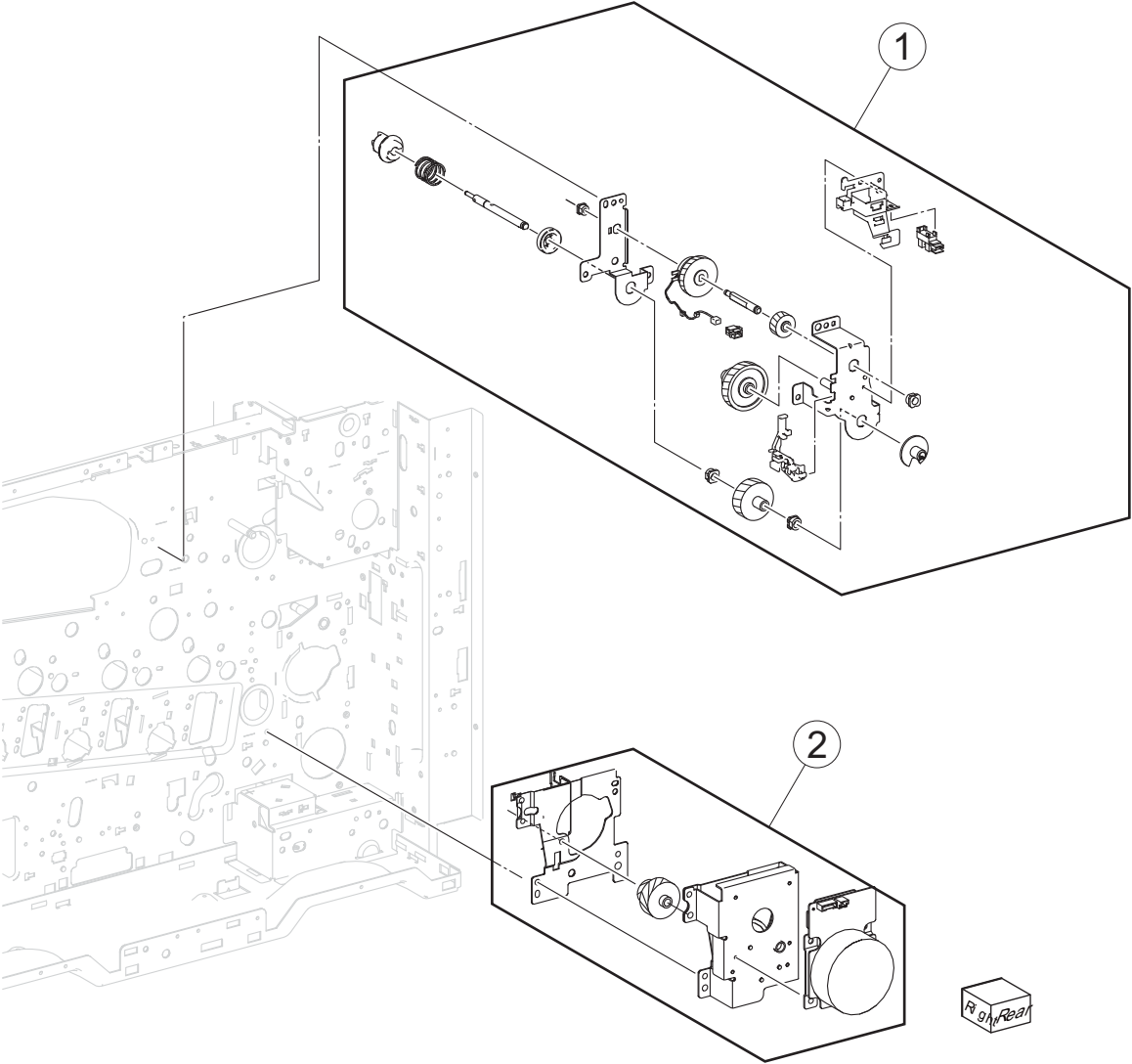
1
2
Right Rear