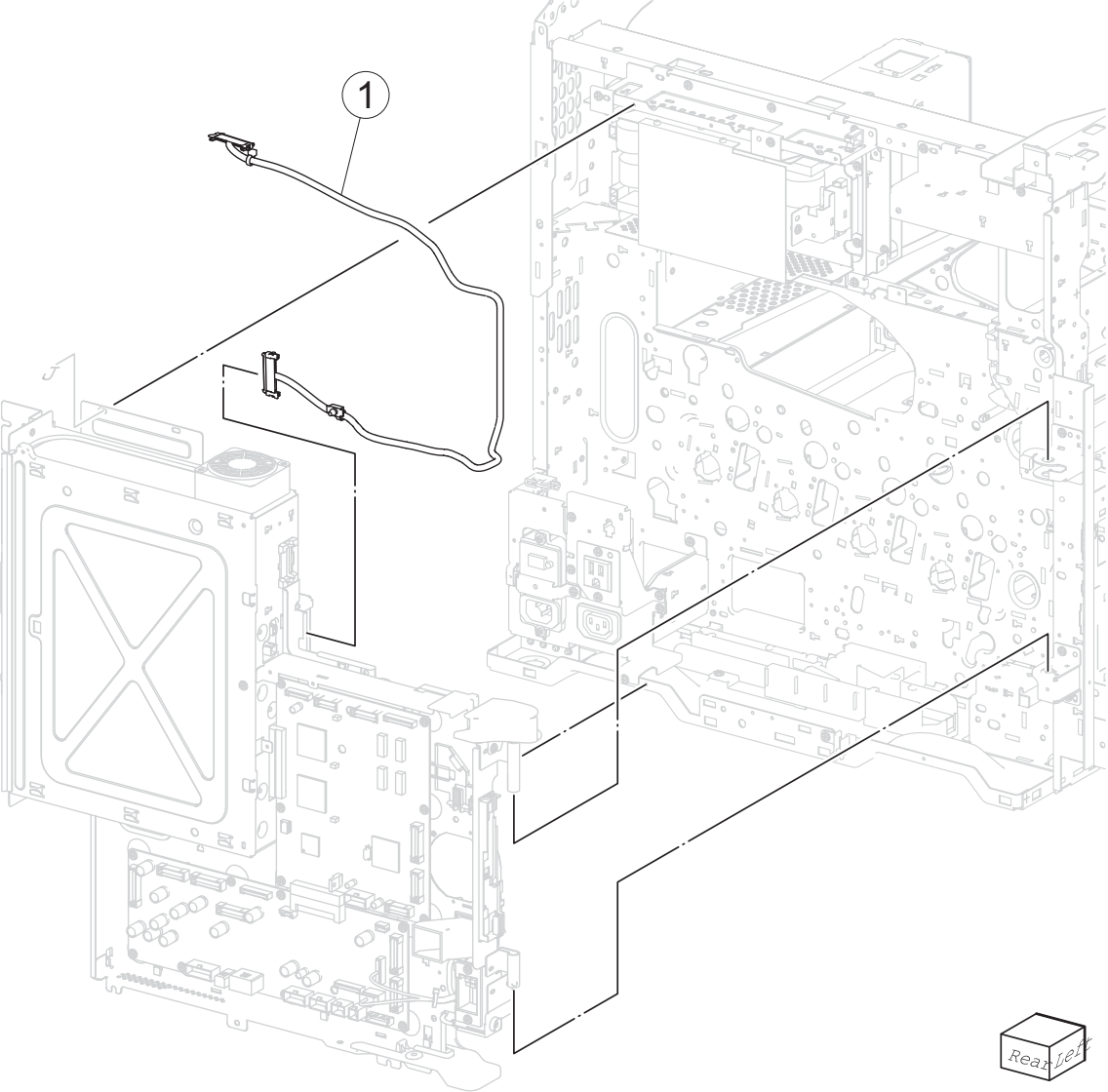
1
Rear left