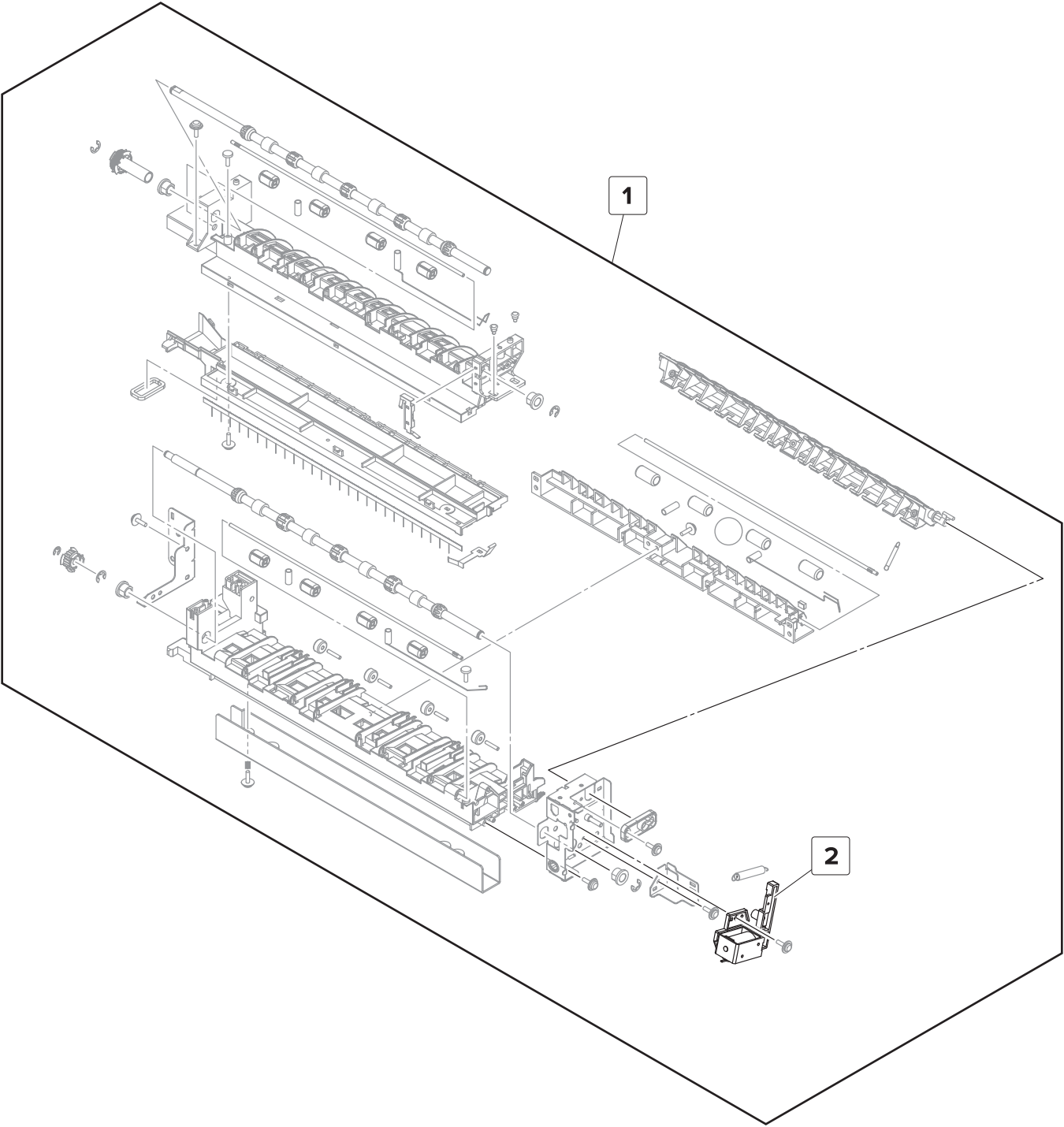
1
2