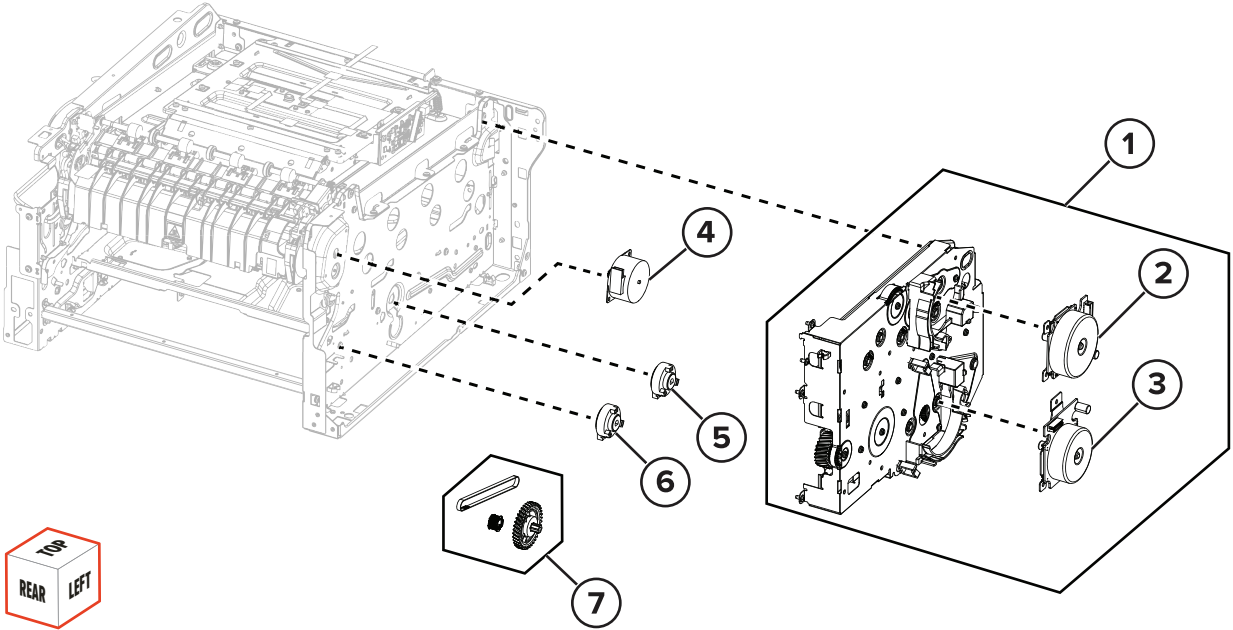
1
2
3
4
5
6
7
TOP
REAR
LEFT