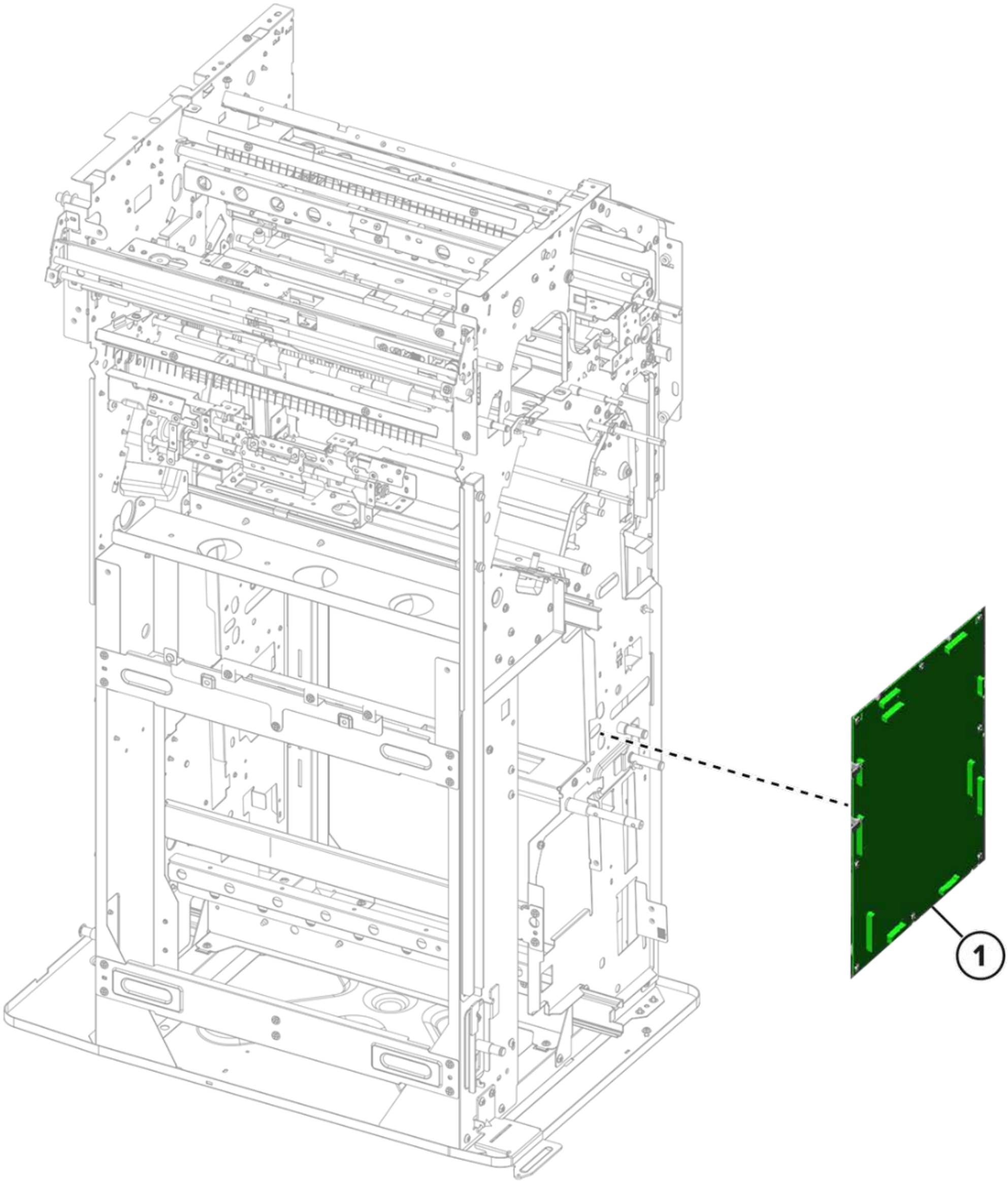
1